CBN 98-16
18 August 1998

CESR Feedback System Using a Constant Amplitude Pulser*

G. Codner, M. Billing, R. Meller, R. Patten,
J. Rogers, J. Sikora, M. Sloand, C. Strohman

Laboratory of Nuclear Studies,
Cornell University, Ithaca, NY 14853

A particle beam feedback system using constant amplitude, 1000 volt, 12 nanosecond pulses has been built to provide longitudinal and horizontal feedback for stabilizing 14 nanosecond spaced bunches for use in CESR (Cornell Electron Storage Ring). The pulse rate is modulated to obtain proportional amplitude control and the pulse arrival time is modulated to obtain both positive and negative kicks. The average repetition rate is limited by pulser power dissipation, but the instantaneous rate may be increased to full duty cycle for short periods of time to handle transients. The pulser drives a 50 ohm stripline kicker so the equivalent peak power at 1000 volts is 10 kilowatts. The characteristics of the pulser and its modulator will be described along with the system's operation.

Background and System Requirements

CESR (Cornell Electron Storage Ring) may store up to 45 bunches each of electrons and positrons in its present operational configuration. The electron and positron beams are arranged in trains of up to 5 bunches with a nominal spacing of 280 ns between lead bunches in a train. The bunches in a train have a minimum spacing of 14 ns. In high current operation the unstable modes of oscillation of the beam must be suppressed using feedback.

The feedback system must sense bunch motion and deliver either deflection or acceleration independently to each bunch in order to damp all of the possible dipole multibunch instabilities. The desired peak amplitude for handling transients is approximately 1000 volts. For a system delivering a sinewave into a non-resonant kicker, a 10 kW amplifier would be required. The power available in the present system

* This work was supported by the National Science Foundation

with a linear amplifier is only 400 watts (140 volts peak) and is obtained by combining the outputs of a pair of 200 watt commercial broadband power amplifiers.

In the linear feedback system these 200 watt amplifiers drive a 50 ohm stripline kicker which is shorted at one end [1]. The plates of the kicker are powered differentially using a hybrid power divider driven by the combined amplifier output. Horizontal excitation is produced directly through deflection of the beam at the kicker. Longitudinal or energy excitation also uses deflection and requires dispersion at the kicker so that horizontal deflections translate into acceleration by changing the orbital path length [2]. Since the kicker is driven in the same fashion for the two modes, they are distinguishable only by the modulation frequency. With the kicker shorted at one end the incident power is completely reflected and must be absorbed by the amplifier.

A higher power driver is desirable, but purchasing additional high power amplifiers and combiners is quite costly, especially since the high power combiners would be custom-built. Because an amplifier must be developed, a unique concept may be considered which is more tailored to accelerator feedback system parameters. The feedback system requires short periods of high output power due to transients followed by longer periods of lower output power as determined by the beam's damping rate and external excitation as well as the gain and noise level of the feedback system. An amplifier with the capability of short-term high power is suggested. It can be simpler and cheaper because its long-term power output is small. In CESR operating with 90 bunches, the average power may be only 10% of the peak power required for transients.

Concept of Feedback with a Pulser

One type of amplifier suited to the feedback system uses a pair of rate-modulated, constant amplitude pulsers, one for each kicker plate. Horizontal deflection is generated by pulsing one kicker plate or the other and acceleration is produced with the plates driven in common-mode so the beam experiences the potential across the gap between the kicker plates and the beam pipe. Because the CESR feedback kicker is shorted, the applied pulse is completely reflected and the reflected pulse is the inverse of the incident pulse.

To minimize self-cancellation the maximum allowed pulse length is 12 ns as measured at the 10% points of the waveform. This comes from the 3 ns transit time of the shorted kicker, from the bunch spacing of 14 ns and from the approximately triangular shape of the high voltage pulse.

Since the pulse energy is small compared to the beam energy, the discrete nature of the excitation does not necessarily adversely affect the transverse beam size. (Computer simulations of feedback by Strohman calculated less than 100 μm RMS horizontal motion for 1500 volt pulses.) Due to the balanced voltage excitation on both plates in the accelerating mode of operation, one would expect any horizontal deflection in this mode to arise only from imbalances in the pulse amplitude, shape and timing.

For a given pulser amplitude the maximum transient amplitude and the achieved damping rate of the beam determine the maximum pulse rate and duration over which the maximum rate is required. For the same fixed pulse amplitude the overall feedback loop gain will be limited by the system quiescent noise level and these three parameters

will largely determine an average power output for the pulser. In the presence of transient excitations of the beam the repetition rate and peak amplitude of the transients will also determine the average reserve pulser power. CESR damping times may be as long as 3 ms so the feedback pulser must be able to provide full duty cycle for at least 3 ms. FETs now available can provide full duty cycle for 10 ms as determined by their transient thermal impedance. Full duty cycle is here defined as 90 pulses per CESR period of 2.56 μs. The main source of periodic transients is injection which can occur every 16.7 milliseconds in CESR.

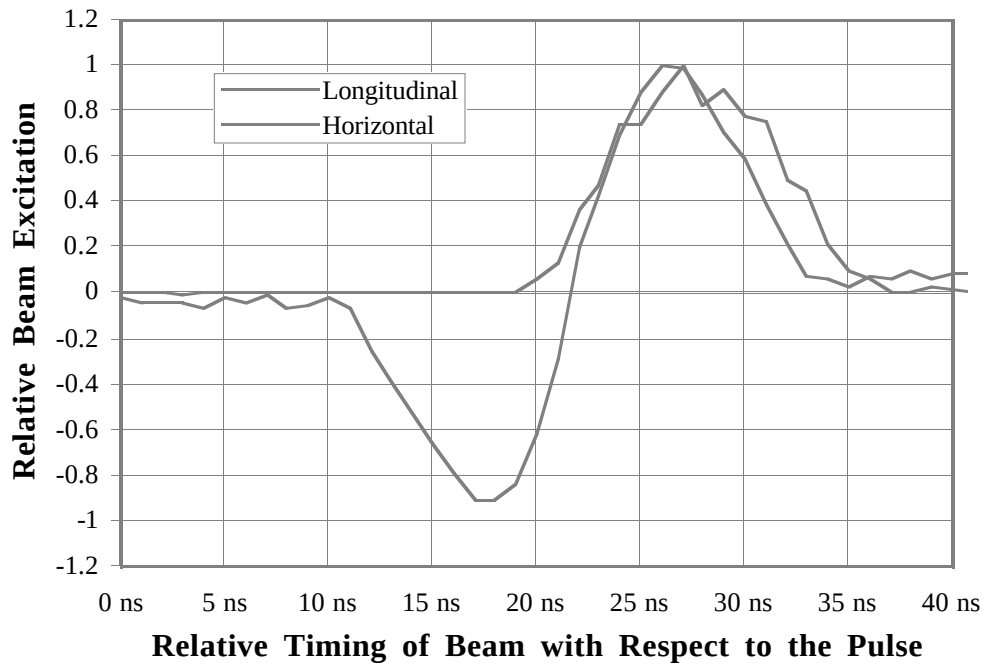

FIGURE 1. Beam excitation vs. relative timing of the beam and the pulse

The horizontal deflection polarity is controlled by pulsing either one plate or the other. Polarity control for longitudinal excitation is obtained by timing the pulse so that the beam arrives either when the accelerating voltage across the gap in the kicker is negative due to the forward wave or positive due to the reflected wave. Figure 1 depicts beam acceleration or deflection versus timing (inferred from measurements of beam amplitude versus timing) for the two modes of beam excitation. For these measurements the pulser rate is modulated at either the synchrotron or the betatron frequency, as appropriate. In the accelerating mode, the pulsers are driven simultaneously whereas only one pulser is driven for horizontal mode. The pulse timing was not modulated, merely varied. A horizontal beam pickup was used in both cases to sense beam amplitude with dispersion at the beam detector necessary to sense longitudinal motion. A spectrum analyzer was used to measure the amplitude.

Pulser System Components

Overview

Figure 2 shows a block diagram of the pulser system. The beam position monitoring electronics and digital signal processor (DSP) [3] provide 10 bit error words for e+ and e-, horizontal and longitudinal inputs to the rate modulator. The rate modulator sends synchronous data to the timing modulator located with the pulser. The timing modulators decode the data and send the appropriately timed triggers to the pulsers. The pulser outputs are transmitted to the kicker using coaxial cables. Lowpass filters (LPF) at the kicker inputs reduce the beam power transmitted back to the pulser.

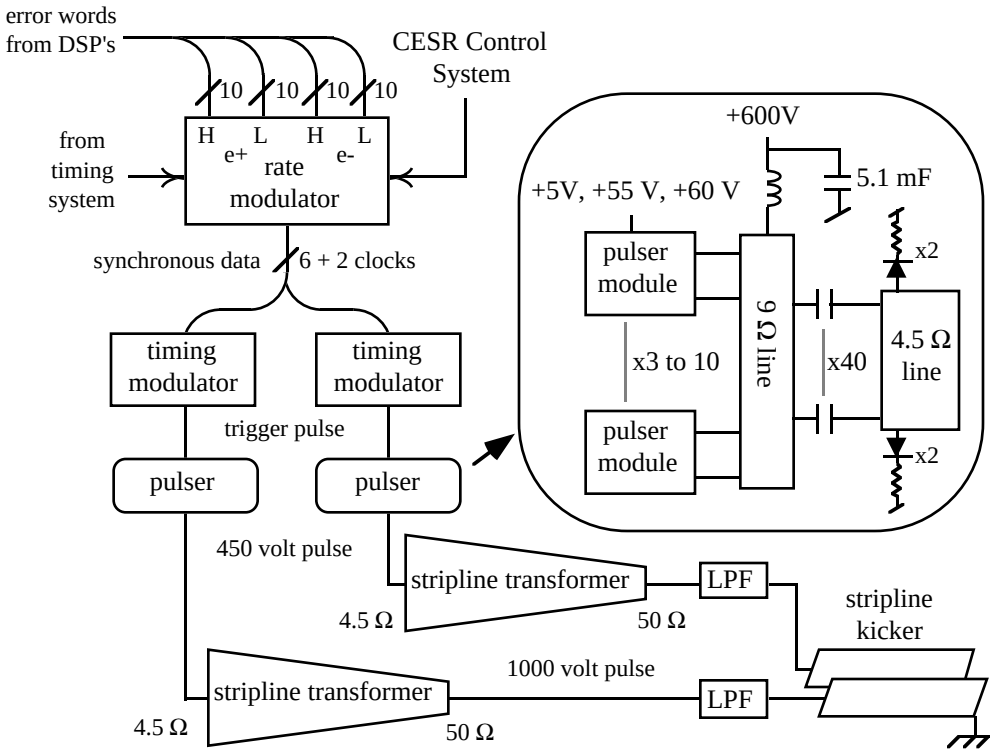

FIGURE 2. Pulser Feedback System Block Diagram

Rate Modulator

The rate modulator accepts two, 10 bit error words for each species of particle (e+ and e-) corresponding to horizontal and longitudinal bunch motion. Each word is compared to a 10 bit pseudo-random number generated by a 17 bit shift register with recursion. If the error word is greater than the random number, a trigger is generated. If both a horizontal and a longitudinal trigger are demanded, the horizontal trigger overrides, since horizontal deflections are expected to be required less frequently. The

trigger information is encoded into a 3 bit word, one each for positrons and electrons, and is sent to the timing modulators along with a separate 36 MHz clock for each species. The three bits correspond to pulse enable, polarity and mode (horizontal or longitudinal). The rate modulator also controls the long-term duty cycle of the pulsers, limiting it gradually to 10% of the 90 pulses per 2.56 μs. An analog input is provided for modulating the pulsers with an external source for diagnostics.

Timing Modulator

The timing modulators accept two sets of synchronous, three bit, parallel data and their corresponding 36 MHz clocks. The clocks and data are received by Hewlett-Packard HCPL-7101 optical isolators and then the clocks are doubled to 72 MHz using S4402 phase-locked loop devices from AMCC. Transmission of the clock at half of the fundamental frequency allows the use of the TTL in, TTL out, 50 megabaud HCPL-7101 with the phase-locked loop providing narrowband filtering of the clock.

The data is decoded, registered and used to select the appropriately timed trigger pulse to be sent to the pulser modules. For example, if the data corresponds to a positive horizontal pulse, one pulser would put out a pulse and the other would not. The timing modulator also includes fault detection circuitry which inhibits triggers if the pulser duty cycle limit is exceeded. The output trigger pulse width is adjustable from 4 to 6.5 ns with a nominal value of 5.8 ns required to obtain a 12 ns high voltage pulse as measured at the 10% points of the waveform (7 ns FWHM).

Pulser Assembly

Each pulser assembly contains from three to ten pulser modules (printed circuit boards) connected to a 9 ohm strip transmission line whose center section is AC coupled to a 4.5 ohm stripline. The transmission lines are made of 3.2 mm thick G10 sandwiched between 6.4 mm thick copper of the appropriate width. Up to ten pulser modules may be mounted to the 51 mm wide, 406 mm long, 9 ohm line. A 600 volt DC power supply and capacitor bank couple to the 9 ohm line through a 6 microhenry air-core inductor. The 5.1 millifarad capacitor bank provides energy storage for short-term high power operation. A regulator board provides a common 60 volt DC as well as regulation for the cascode nodes of each pulser module. The pulser is packaged in a welded aluminum enclosure with four separate EMI isolated compartments for the pulser modules, timing modulator, regulator and capacitor bank. Control, interlock and power supply connections between compartments and out of the pulser enclosure pass through RF filters.

Four, 20 ohm RF resistors (Florida RF Labs P/N 32-1143-20-5) are diode-coupled to the 4.5 ohm line to provide a termination for the reflected pulse from the shorted kicker. Each termination resistor is in series with a pair of UH840 ultra-fast recovery diodes. The power transistors, RF terminations and all of the copper conductors are water-cooled.

The UH840 diode reverse recovery time is an important parameter since in order to be properly terminated, the pulser must not be triggered when the reflected pulses return. In CESR the cable length was chosen so that the reflected pulses arrive between

trains. Nevertheless, the minimum unforced recovery time of currently available diodes mandates skipping every other train. The odd number of trains in CESR ensure that every train will be driven. (Note that the unforced recovery time of the diodes is approximately ten times the recovery time on the manufacturer's specification sheet because this specification applies to forced recovery.) One option for overcoming this limitation is to put out an early pulse which forces the diodes to recover. The "recovery pulse" would allow the pulser to excite successive trains in CESR but would lower its effective duty cycle capability.

Pulser Module

The pulser module consists of a pre-driver and a cascode driver and power stage packaged on a printed circuit board. The design, shown in Figure 3, was adapted from the CESR gun pulser [4] with significant changes to provide much higher duty cycle capability. The longer pulse width of the feedback pulser compared to the gun pulser allows the use of more readily available power devices since the relatively high inductance of the commonly available package can be tolerated by using high gate voltage together with the cascode arrangement.

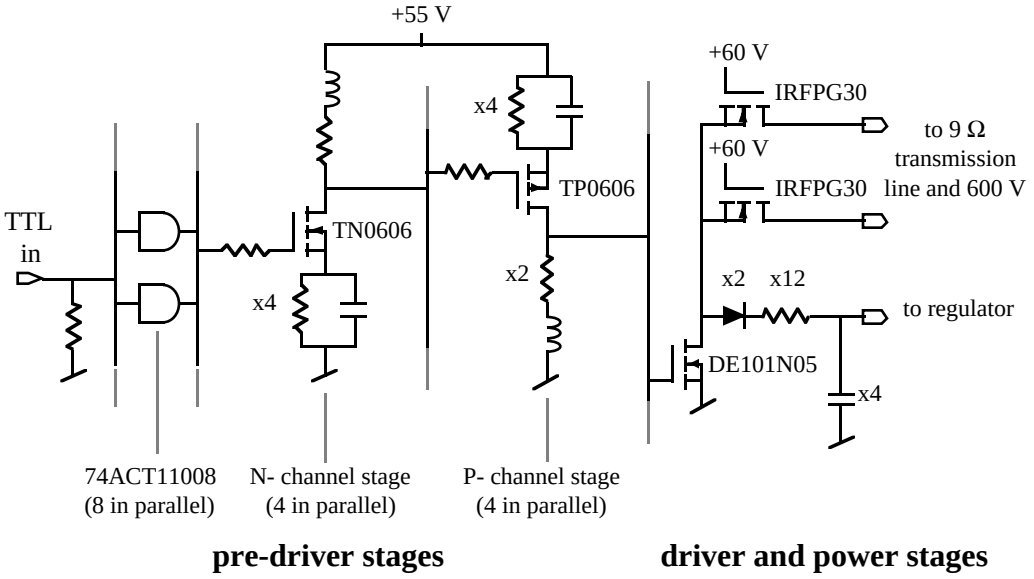

FIGURE 3. Pulser module schematic diagram

Most of the board area is occupied by the pre-driver. This consists of eight 74ACT11008 AND gates in parallel driving an N-channel stage using four paralleled TN0606 MOSFETs (packaged in a single 16 pin ceramic DIP) which in turn drives a P-channel stage consisting of four TP0606 MOSFETs in parallel (also in a 16 pin ceramic DIP). Separate resistors in series with each transistor's gate prevent oscillations due to interactions between the paralleled devices. The pre-driver delivers a 20 volt, roughly triangular pulse to the driver transistor.

The driver/power stage is in a cascode configuration. The driver is a DE101N05, an extremely fast, 100 V, RF MOSFET in a special low inductance package. The output stage contains a pair of IRFPG30, 1 kV MOSFETs in parallel. The gates of the

IRFPG30s are biased at a nominal 60 volts, although this voltage is adjustable to optimize pulse shape and power dissipation. The drains of the IRFPG30s are bolted to the 9 ohm transmission line which also serves as a heat sink.

Transformer

The transformer is a tapered stripline device made of copper and G10. It provides an impedance transformation from 4.5 ohms to 50 ohms. The ground plane is 150 mm wide, 6.4 mm thick OFHC copper with water cooling. At the 4.5 ohm end, the G10 is 3.2 mm thick and the signal conductor is 102 mm wide. The G10 thickness tapers to 6.4 mm and the copper width to 12.7 mm at the 50 ohm end, 7.3 m away. The dielectric thickness is tapered because the signal conductor at the 50 ohm end of the line has to be wide enough for attaching cooling tubes. The entire assembly is packaged inside an aluminum enclosure for EMI shielding and safety.

The 4.5 ohm end of the transformer is intimately mated with the 4.5 ohm line in the pulser assembly. A type-N connector emerges from the 50 ohm end. The transformer provides a peak voltage transformation ratio of 2.4:1 for a 12 ns pulse, less than the ideal ratio due to dispersion and droop, so it delivers a 1080 volt pulse out for a 450 volt pulse in. Each transformer output is connected with coaxial cable to a lowpass filter and then the kicker.

Performance in CESR

The pulser feedback system has been installed and tested in CESR. Measurements of beam excitation versus timing show that the pulser's effect on the beam is as expected for both horizontal and longitudinal modes. Crosstalk between the two modes has been measured and found to be acceptable although additional filtering of the sensed signals for each bunch is desirable. The feedback loops have been closed for both horizontal and longitudinal modes and they produce stable beams for both positrons and electrons. As an example, Figure 4 shows the horizontal beam response to transient excitation with and without feedback. The measurement was made using 9 trains of positrons with one 6 mA bunch per train. A horizontal beam position monitor was observed with a spectrum analyzer set to zero span and centered on a betatron sideband. The beam is driven for about 4 milliseconds and then allowed to damp. The exponential decay appears linear with time on the log plot so the time constant is extracted by measuring the time it takes the amplitude to change by 8.7 dB. These preliminary measurements indicate that a duty cycle modulated pulser acting as a "digital amplifier" is a viable alternative to linear or CW phase-controlled amplifiers for providing particle beam feedback.

Future Development

A new signal processor (recently developed for CESR by Meller) incorporates digital filtering for each bunch and will facilitate pulser feedback by reducing both receiver noise and crosstalk between horizontal and longitudinal modes. Final installation of fault protection and interface circuits is complete and the pulser feedback

system will soon be commissioned for regular use in high energy physics operation of CESR.

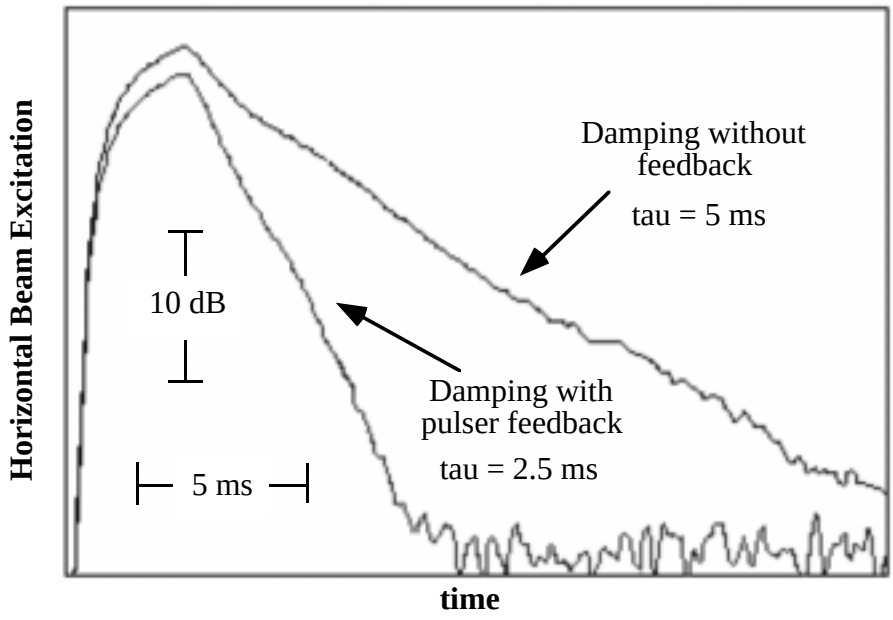

FIGURE 4. Measured horizontal damping in CESR

ACKNOWLEDGEMENTS

Thanks to the operations and technical staff at Wilson Synchrotron Laboratory, especially to Buzz Metzler for his artistic plumbing. Thanks to John Stauffer for many long hours designing and assembling the stripline transformer. Thanks to Don Dawson, Bill Hnat, Mike Comfort, Mike Ray, Margee Carrier and Bob Strohman for their applied expertise.

REFERENCES

[1] J. Rogers, "Coupling of a Shorted Stripline Kicker to an Ultrarelativistic Beam", Cornell CBN, 95-04, April 21, 1995.
[2] D. Sagan, M. Billing, "Using a Horizontal Kicker to Damp Longitudinal Oscillations", Cornell CBN 96-06, May 23, 1996.
[3] J. Rogers, M. Billing, J. Dobbins, C. Dunnam, D. Hartill, T. Holmquist, B. McDaniel, T. Pelaia, M. Pisharody, J. Sikora, C. Strohman, "Operation of a fast digital transverse feedback system in CESR", Particle Accelerator Conference, May 17, 1995.
[4] C. Dunnam, R. Meller, "Nanosecond MOSFET Gun Pulser for the CESR High Intensity Linac Injector", International Particle Accelerator Conference, May 1, 1993.